2-Band-Classic-Bass-Preamp *2021-01-11*

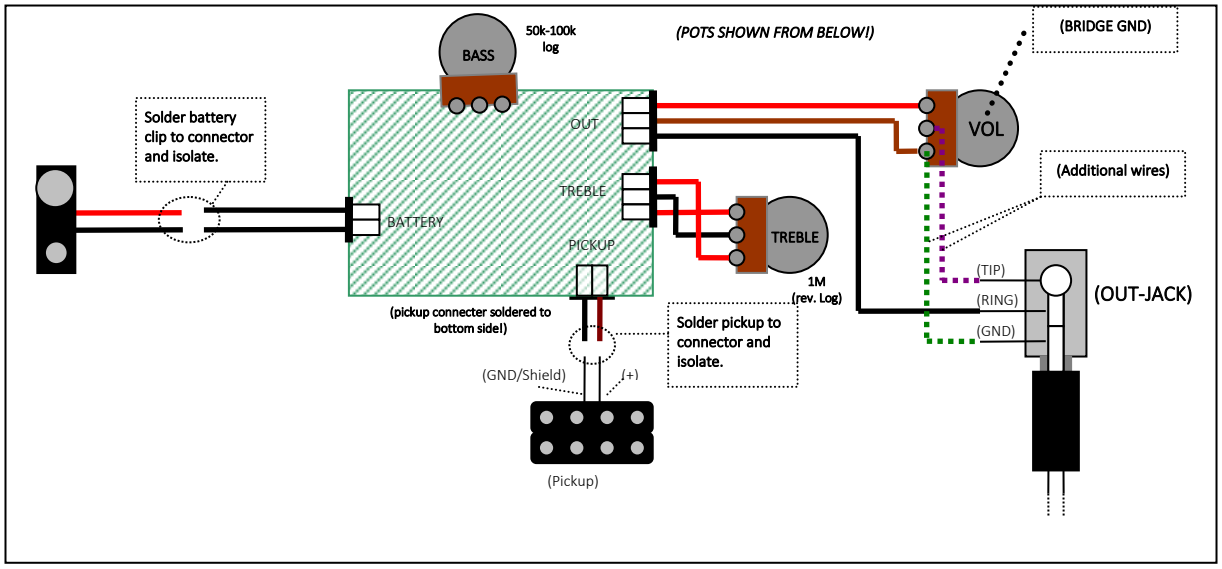

Notes:

- All pots should be grounded!
- If the battery is placed near the preamp wire the battery clip directly to the pcb.
- This classic design must be connected directy to the passive pickup. No additional resistance in series to the pickup(s) such as blend/balance pot or the classic Jazz Bass wiring will work. Multiple passive pickups can be used if they are switched.

Board layout:

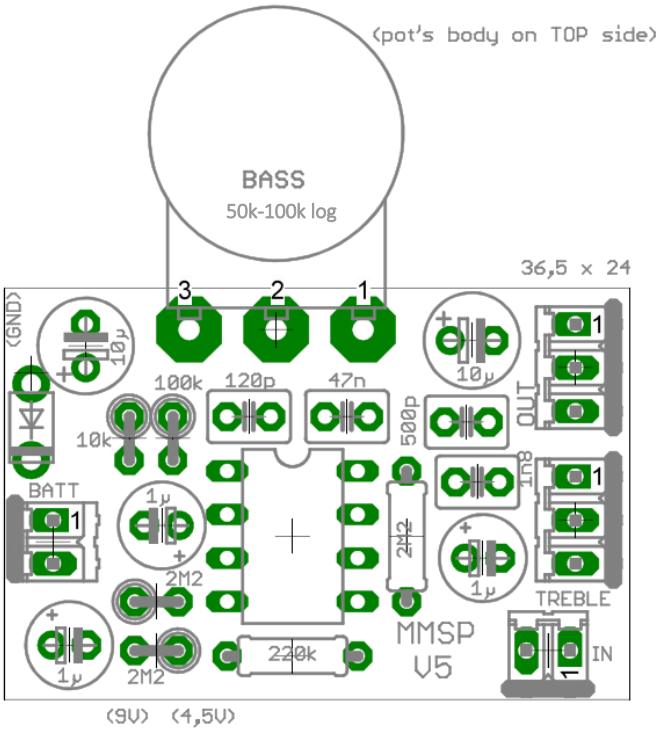

Schematics:

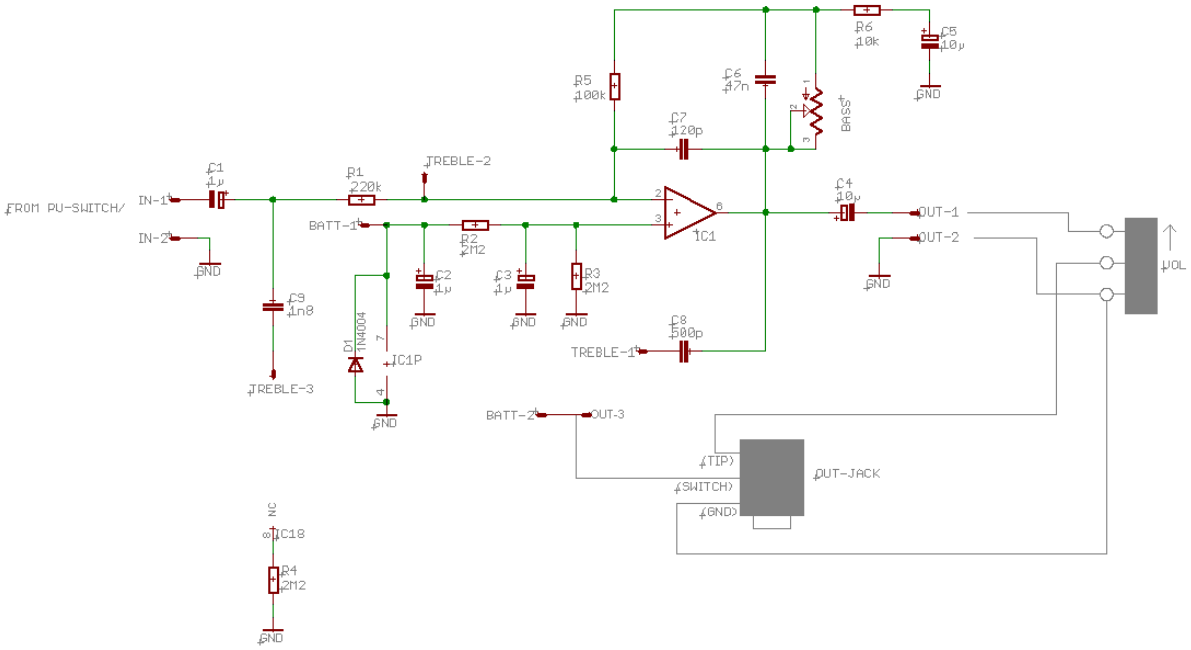

Notes:

- The value of R4 changed through the years, sometimes 1M5 is used. It is recommended to use 2M2 and wire and add an additional resistor in parallel.
- The value of C9 also changed through the years. It is recommended to start with 1n5 and only add a parallel cap if the treble frequency needs to be dropped.